Solvent Supply in Rough Separation of Coal Tar Absorption Oil using Counter-current Multistage Extraction Method

Student ID# : 9532431 Name : WATANABE, Ryohei Supervisor : HINODE, Hirofumi and EGASHIRA, Ryuichi

1. Introduction

Absorption oil (AO) is one of the fraction products from distillation of coal tar at 200~280℃. This fraction consists mainly of homocyclic aromatic hydrocarbons (Ar-C) such as 2-methylnaphthalene (2MN), 1-methylnaphthalene (1MN), biphenyl (BP), *etc*., heterocyclic nitrogen compounds (Ar-N) such as quinoline (Q), isoquinoline (IQ), indole (I), *etc*., and heterocyclic oxygen compounds (Ar-O) such as dibenzofuran (DBF), *etc*. These compounds are industrially valuable as raw materials for producing medicine, dye, perfume, and many other useful chemicals. Industrially, these compounds are ① separated roughly into Ar-N and other compounds using acidic and basic separation and ② purified from each streams (Ar-N, others) into each compound using crystallization, rectification, or other methods. However there are some difficulties in the method used in ① such as corrosion of extraction equipments and problems in solvent recovery. Therefore a more convenient method is desired.

Some methods for separation of absorption oil such as supercritical extraction, inclusion separation, emulsion liquid membrane and solvent extraction method have been researched. From the previous study in solvent extraction method, the followings are reported. (1) Aqueous methanol can be used as solvent.[1)] (2) Simulation of counter-current multistage extraction process showed that reflux can improve the separation.[2)] (3) The increase in mass fraction of water in solvent decreased the distribution coefficient of compounds. However, Ar-C and Ar-O decreased significantly compared to Ar-N.[1,2)] (4) The aqueous methanol solvent can be recovered from extract using distillation method.[2)]

Considering the result in (3), by changing the solvent composition provided to the extraction tower, it may be possible to improve the separation process. In this work, a counter-current multistage extraction process with reflux, and two solvent streams with different compositions was simulated and the effects of operation conditions were studied. Also the energy required in solvent recovery was evaluated.

2 Counter-current Multistage Extraction Process

2.1 Outline of the process

Figure 1 shows the flow of the process. Feed **F** is introduced to the column on stage $\mathbf{n_F}$, and contacted with solvent $\mathbf{S_A}$ and $\mathbf{S_B}$ which are introduced respectively on $\mathbf{n_S}$ and at the bottom of the extraction column. The extract $\mathbf{E_1}$ then separated into methanol **M**, water **W**, and Ar-N product **P**. using distillation column ① and decanter. A portion of **P** is returned to stage 1 as reflux $\mathbf{R_0}$.

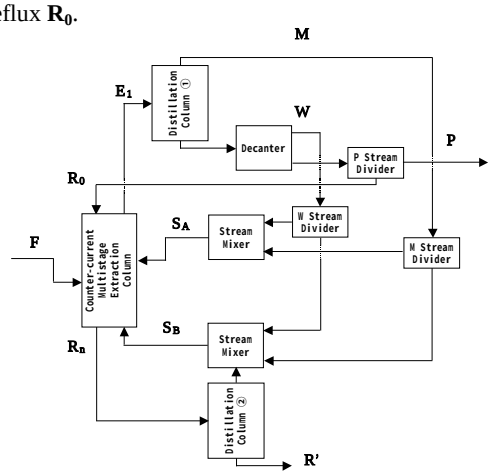

Fig.1 The process figure of counter-current multistage extraction with reflux and solvent supply into two stages

2.2 Assumptions in process simulation

The assumptions made in the process simulation are shown in Table 1.

Table 1 The assumptions of the process

Extraction Process
- Extraction column's stages at **equilibrium**
- No **water** transfer into raffinate phase
- No **etc compounds** transfer into extract phase
- Mass fraction of methanol in solvent streams were set smaller than 0.9
- Solvent was fully recovered from extract phase

Solvent recovery (distillation)
- Total condenser
- No pressure loss inside the distillation column

2.3 Basic Equations

Equations of the material balance are

$$\mathbf{R_{k-1}\ x_{k-1.i} + E_{k+1}\ y_{k+1.i} + F_k\ z_{k.i} + S_k\ u_{k.i} = R_k\ x_{k.i} + E_k\ y_{k.i}}$$ (k=1~n), and so on.

Equations of the liquid-liquid equilibrium are

$$\mathbf{y_{k.i} = m_{k.i}\ x_{k.i}}$$

Equations of of constraint of the mass fraction are

$$\sum_i \mathbf{x_{k.i}} = 1 \text{ (k=0~n)}, \qquad \sum_i \mathbf{y_{k.i}} = 1 \text{ (k=1~n+1)},$$

$$\sum_i \mathbf{z_{k.i}} = 1 \text{ (k=1~n)}, \qquad \sum_i \mathbf{u_{k.i}} = 1 \text{ (k=1~n), and so on.}$$

Yield, α and purity, β of Ar-N in product P are defined as

$$\alpha = \frac{\mathbf{P(v_{P.Q} + v_{P.IQ} + v_{P.I})}}{\mathbf{F(z_Q + z_{IQ} + z_I)}}, \qquad \beta = \mathbf{v_{P.Q} + v_{P.IQ} + v_{P.I}}$$

Dividing ratio of water,**a** and methanol,**b** are defined as

$$\mathbf{a} = \mathbf{S_A u_{A.W}} / \mathbf{S_C u_{C.W}}, \qquad \mathbf{b} = \mathbf{S_A u_{A.M}} / \mathbf{S_C u_{C.M}}$$

2.4 Conditions for Calculation

The conditions for calculation are shown in Table 2 and 3.

Table 2 Conditions for calculation of counter-current multistage extraction

the number of stages of extraction column	$\mathbf{n}$ =5~13
feed stage number of extraction column	$\mathbf{n_F}$ =1~n
solvent stage number	$\mathbf{n_S}$ =1~n
reflux ratio [-]	$\mathbf{r}$ =0~2
mass flow rate of absorption oil feed [kg/h]	$\mathbf{F}$ =1
mass fraction of main components in absorption oil feed [-]	
$\mathbf{z_Q}$ =0.088, $\mathbf{z_{IQ}}$ =0.024, $\mathbf{z_I}$ =0.052, $\mathbf{z_{2MN}}$ =0.28,	
$\mathbf{z_{1MN}}$ =0.012, $\mathbf{z_{BP}}$ =0.081, $\mathbf{z_{DBF}}$ =0.062, $\mathbf{z_{etc}}$ =0.401	
feed-solvent ratio [-]	$\mathbf{F}/\mathbf{S_C}$ =2~4
mass fraction of component M in all solvent [-]	$\mathbf{u_{C.M}}$ =0.5~0.9
dividing ratio of water [-]	$\mathbf{a}$ =0~1
dividing ratio of methanol [-]	$\mathbf{b}$ =0~1

Table 3 Conditions for calculation of the energy required in solvent recovery

the number of stages of distillation column	$\mathbf{n_D}$ =20
feed stage number of distillation column	$\mathbf{n_{DF}}$ =10
mass fraction of component M in [-]	$\mathbf{t_{M.M}}$ =0.997
mass flow rate of extract feed [kg/h]	$\mathbf{E_1}$ =2.82~6.70
mass fraction of all components in extract feed [-]	$\mathbf{y_{1.M}}$ =3.84E-1~6.29E-1,
$\mathbf{y_{1.W}}$ =1.05E-1~5.39E-1, $\mathbf{y_{1.Q}}$ =3.58E-2~8.61E-2, $\mathbf{y_{1.IQ}}$ =9.76E-3~2.35E-2,	
$\mathbf{y_{1.I}}$ =1.92E-2~5.07E-2, $\mathbf{y_{1.2MN}}$ =2.08E-4~1.19E-1, $\mathbf{y_{1.1MN}}$ =1.11E-5~4.52E-3,	
$\mathbf{y_{1.BP}}$ =8.26E-5~3.19E-2, $\mathbf{y_{1.DBF}}$ =2.78E-5~2.38E-2, $\mathbf{y_{1.etc}}$ =0	

2.5 Means of calculations

The basic equations were solved simultaneously by a commercial equation solving software, EQUATRAN-G. And the energy required in solvent recovery were calculated by a chemical engineering simulation software, ChemCAD Ⅲ.

3 Results and Discussion

As dividing ratio of water, **a**, increased, and as that of methanol, **b**, decreased, both yield, α, and purity, β, of Ar-N in P increased (**Fig.2**). Also α and β were the highest when only water (**b**=0) was introduced on stage $\mathbf{n_S}$ while aqueous methanol (with mass fraction of methanol 0.9) was introduced on stage n. (In previous study, aqueous methanol with methanol concentration over about 0.9 will become miscible to AO. Thus, in this study, the max. methanol conc. in solvent was set to 0.9.)

Figure 3 shows that α and β increased with higher position of $\mathbf{n_S}$ ($\mathbf{n_S}$→1) with the highest α and β at $\mathbf{n_S}$=1 and $\mathbf{n_F}$=3. However, the suitable n_F may change according to compositions of streams inside the column.

The increase in mass flow rate of water provided into $\mathbf{n_S}$, $\mathbf{S_A}$*$\mathbf{u_{A.W}}$, decreases α and increases β (**Fig.4**). The results in this conditions showed that the process with water supplied as $\mathbf{S_A}$ on $\mathbf{n_S}$ was superior to the one without. And it is possible to obtain products with desirable yield and concentration by adjusting the amount of water supplied as $\mathbf{S_A}$.

As $\mathbf{S_A}$*$\mathbf{u_{A.W}}$ increased, heat rate of reboiler **Q** and reflux ratio $\mathbf{r_D}$ required in the distillation in solvent recovery to reach the conditions showed in Table 3 increased (**Fig.5**).

4 Conclusion

This study showed that process with two solvent streams supplied to the extraction column was better than the one with only one solvent stream supplied to the bottom of column. And by adjusting the amount of solvent S_A within tolerable range concerning required energy and reflux for solvent recovery, products with desirable yield and concentration can be obtained.

Nomenclature

n : the number of stages of extraction colum [−] , $\mathbf{n_F}$: feed stage number of extraction column [−] , $\mathbf{n_S}$: solvent stage number [−] , $\mathbf{R_k}$: mass flow rate of raffinate from stage *k* [kg・h^{-1}] , $\mathbf{x_{k.i}}$: mass fraction of component *i* in raffinate from stage *k* [−] , $\mathbf{E_k}$: mass flow rate of extract from stage *k* [kg・h^{-1}] , $\mathbf{y_{k.i}}$: mass fraction of component *i* in extract from stage *k* [−] , $\mathbf{F_k}$: mass flow rate of feed into stage *k* [kg・h^{-1}] , $\mathbf{z_{k.i}}$: mass fraction of component *i* in feed into stage *k* [−] , $\mathbf{S_k}$: mass flow rate of solvent into stage *k* [kg・h^{-1}] , $\mathbf{u_{k.i}}$: mass fraction of component *i* in solvent into stage *k* [−] , $\mathbf{m_{k.i}}$: distribution coefficient of component *i* at stage *k* [−] , **r** : reflux ratio in extraction colum [−] , **a** : dividing ratio of water in W stream divider [−] , **b** : dividing ratio of methanol in M stream divider [−] , $\mathbf{S_A}$: mass flow rate of solvent into solvent stage [kg・h^{-1}] , $\mathbf{u_{A.i}}$: mass fraction of component *i* in solvent into solvent stage [−] , $\mathbf{S_B}$: mass flow rate of solvent into stage n (=$\mathbf{E_{n+1}}$) [kg・h^{-1}] , $\mathbf{u_{B.i}}$: mass fraction of component *i* in solvent into stage n (=$\mathbf{y_{n+1.i}}$) [−] , $\mathbf{S_C}$: mass flow rate of all solvent (=$\mathbf{S_B}$+$\mathbf{S_C}$) [kg・h^{-1}] , $\mathbf{u_{C.i}}$: mass fraction of component *i* in all solvent [−] , **P** : mass flow rate of product [kg・h^{-1}] , $\mathbf{v_{P.i}}$: mass fraction of component *i* in product [−] , α : yield of nitrogen heterocyclic compounds in product [−] , β : purity of nitrogen heterocyclic compounds in product [−] , **Q** : enerugy required in solvent recovery in distillation column①[MJ・h^{-1}] , $\mathbf{r_D}$: reflux ratio in distillation column①[−] , $\mathbf{n_D}$: the number of stages of distillation column①[−] , $\mathbf{n_{DF}}$: feed stage number of distillation column①[−]

Reference

1) Egashira, R. and Nagai, M., *Sekiyu Gakkaishi*, 43, *p*339~345, (2000)
2) Egashira, R. and Salim, C., *Sekiyu Gakkaishi*, 44, *p*178~182, (2001)
3) Kodera, Y. *et al.*, *Fuel*, 70, p765~769, (1991)
4) Ukegawa, K *et al.*, *Sekiyu Gakkaishi*, 33, *p*250~254, (1990)

Table 4 Description of conditions on Fig 4 and 5

condition number	n	n_F	n_S	r	S_B	$u_{B.M}$
1	5	3	1	2	2	0.9
2	5	3	1	1	2	0.9
3	5	3	1	2	4	0.9
4	7	4	1	2	2	0.9

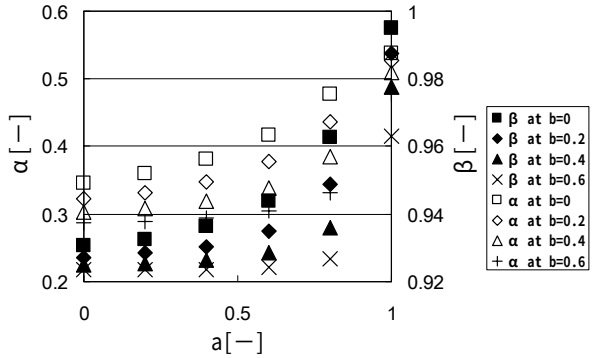

Fig.2 Effects of dividing ratio of water and methanol, a and b, on yield and purity, α and β.
(n=5, n_F=3, n_S=3, r=2, S_C=2, $u_{C,M}$=0.5)

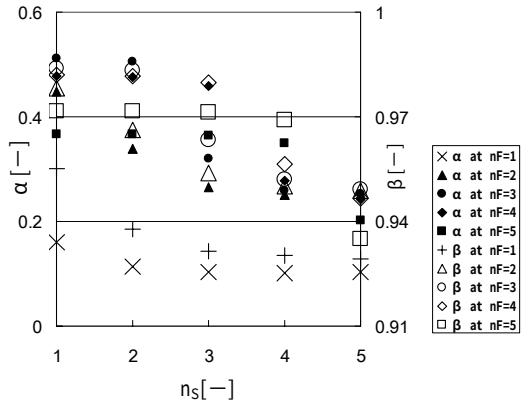

Fig.3 Effects of solvent stage number and feed stage number, n_S and n_F, on yield and purity, α and β.
(n=5, r=2, S_C=2, $u_{C,M}$=0.5, a=0.6, b=0)

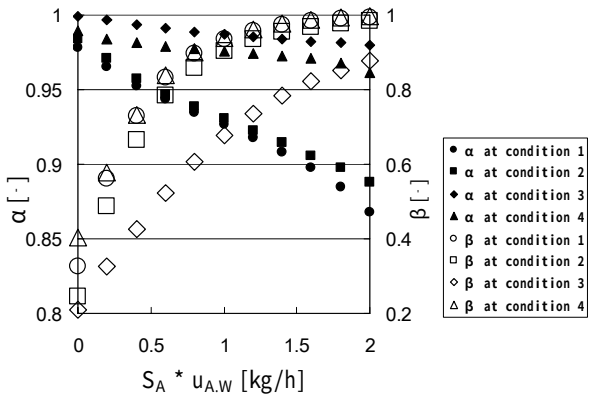

Fig.4 Effects of mass flow rate of water supplied into solvent stage, S_A*$u_{A.W}$, on yield and purity, α and β.

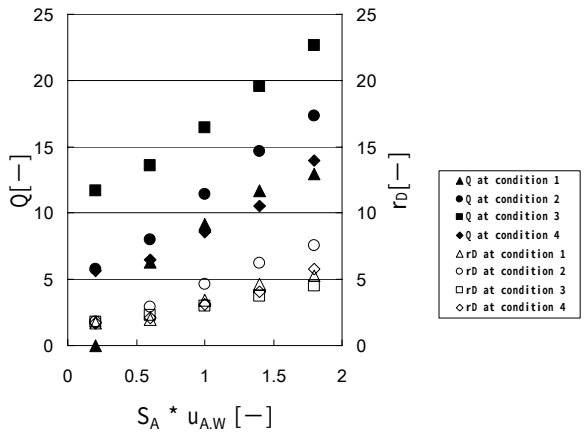

Fig.5 Effects of. mass flow rate of water supplied into solvent stage, S_A*$u_{A.W}$, on the enerugy required in solvent recovery and reflux ratio in distillation column ①, Q and r_D